SEOUL SEMICONDUCTOR

Technical Workbook for AIC

Rev.03

L.4 Division

September, 2013

Legal Disclaimer

Information in this presentation is provided in connection with Seoul Semiconductor products and/or business operation. While Seoul Semiconductor has made every attempt to ensure that the information contained in this presentation has been obtained from reliable sources, Seoul Semiconductor is not responsible for any errors or omissions, or for the results obtained from the use of this information.

All information in this presentation is provided "as is" with no guarantee of completeness, accuracy, timeliness or of the results obtained from the use of this information, and without warranty of any kind, express or implied, including, but not limited to warranties of merchantability, performance, and fitness for a particular purpose, or any warranty otherwise arising out of any proposal, specification, or sample.

In no event will Seoul Semiconductor, its related corporations, or the employees thereof be liable to you or anyone else for any decision made or action taken in reliance on the information in this presentation or for any consequential, special or similar damages, even if advised of the possibility of such damages.

Acrich2 IC Introduction

Acrich IC Comparison

■ Acrich2 Driver IC

- ✓ **Acrich2, 1st : Fully integrated IC**
- ✓ **Acrich2, 2nd : Improved EMI and Thermal characteristics of IC Package**

Table. 1 Specification Comparisons

Item		Acrich2 (1st Generation)	Acrich2 (2nd Generation/Acrich2+)
Power Factor		> 0.97	> 0.97
THD		< 25%	**< 15%**
Power Adjust		4W & 8W (None - Power by IC Type)	**1W ~ 16W**
Switching Step	**120Vrms**	2Step, 40~50V (Per step)	**4Setp, 20 – 65V (Per step) (Free voltage IC)**
	220Vrms	4Step, 40~65V (Per step)	
Dimming	**AC – Triac/Phase Cut**	Performance based on Dimmer	Improved but still based on Dimmer
	0 to 10V Analog Dimming	No	Optional
Over Temperature Protection		T_j Min. 140℃ ~ Max. 150℃ (@θ_{JC} 120℃)	T_j Min. 140℃ ~ Max. 150℃ (@θ_{JC} 135℃)
Package Type	**4W**	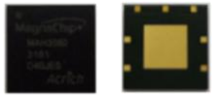 LGA. 6mmX6mm (Embedded Bridge Diode with TVS)	 1~16W/Max.17W QFN. 6mmX6mm (External Bridge Diode)
	8W	 LGA. 8mmX8mm (Embedded Bridge Diode with TVS)	

Acrich IC Comparison

■ Acrich2 Driver IC

Table. 2 Typical Application

Acrich2 (1st Gen.)	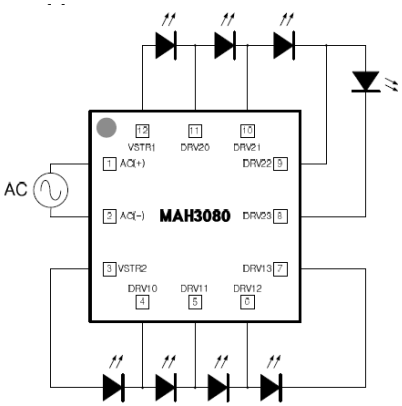 MAH3080	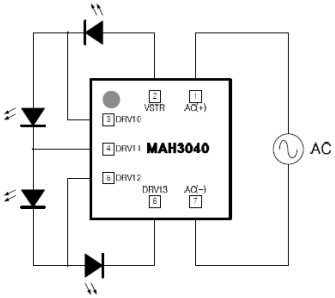	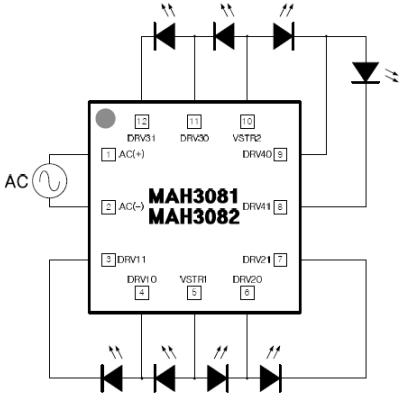 MAH3081/2	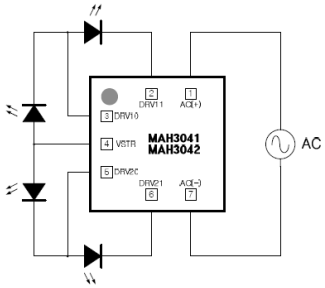
	Block Diagram 220V 8W	**Block Diagram 220V 4W**	**Block Diagram 120V 8W**	**Block Diagram Circuit 120V 4W**
Acrich2 (2nd Gen.)	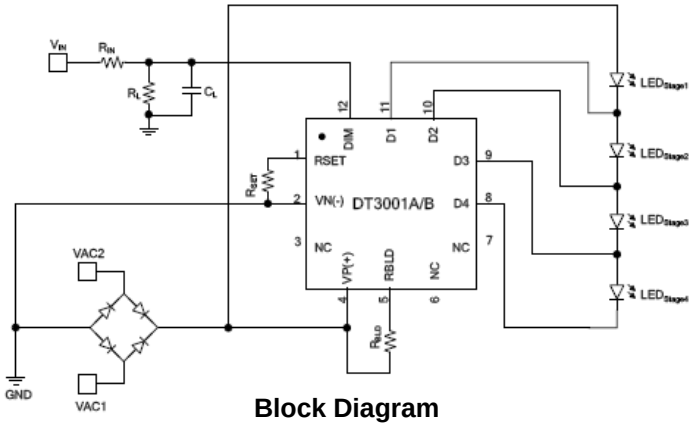 **Block Diagram 1W ~ 16W (Input AC Voltage is limited by total V_F)**			**Wider range voltage and Power**

Acrich IC Comparison

■ Acrich2 Driver IC

Table.2 Functional Block Diagram

Acrich2 (1st Gen.)	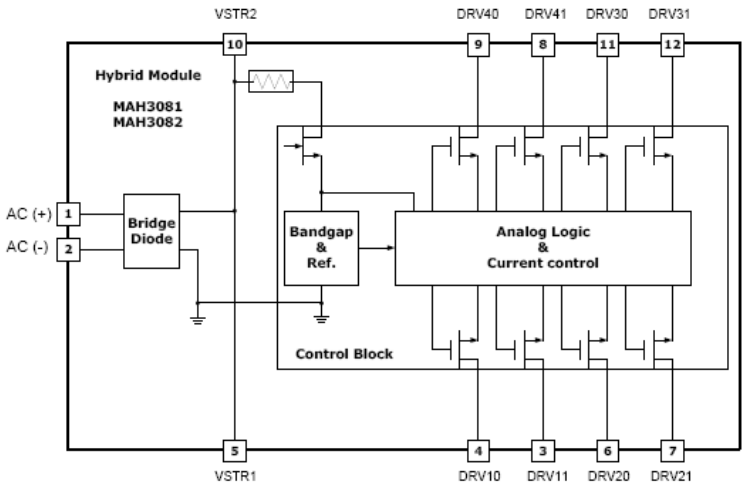 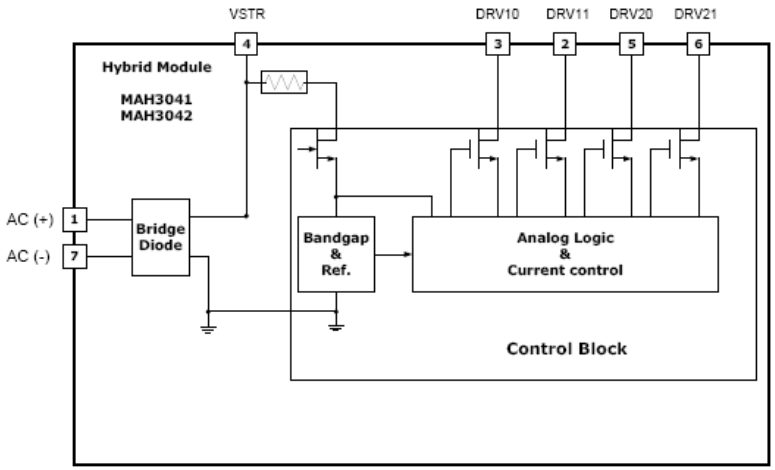
Acrich2 (2nd Gen.)	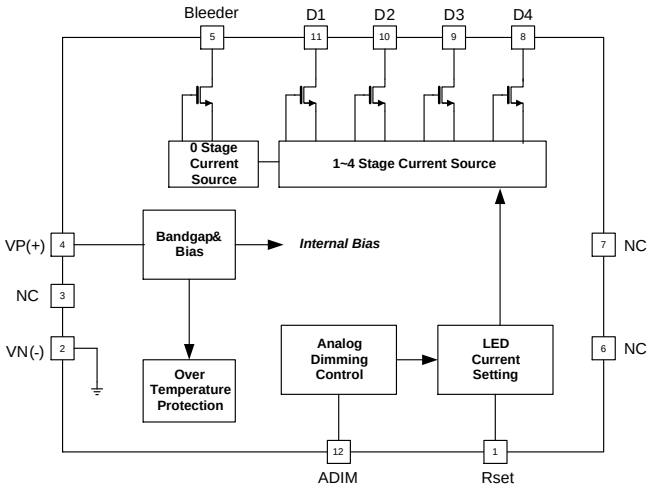

Understanding Acrich2 IC

Main feature of Acrich 2

- Our approach is to simplify LED lamp design
- Reduce lamp weight
- Low circuit cost
- Life time

(Acrich2 Solution : 50,000hr Vs. DC LED Lamp : 15,000hr)

- Flicker improvement
- Dimming support

Basic mechanism of Acrich Module

How Acrich IC works in Acrich2

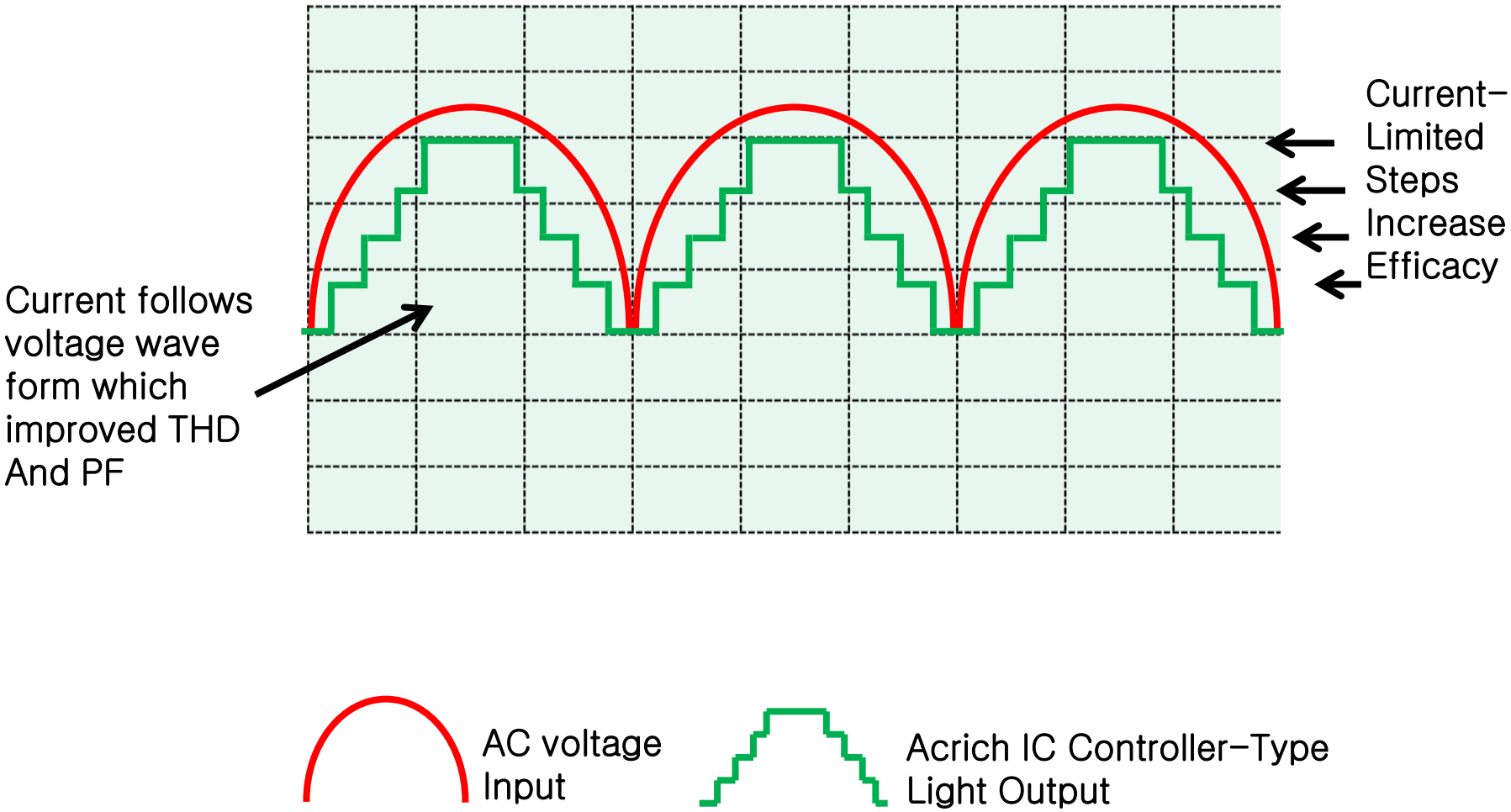

Basic mechanism of Acrich Module

Functional Description of Acrich 2 (Ex. 220V 8W application)

Circuit Diagram of Acrich 2

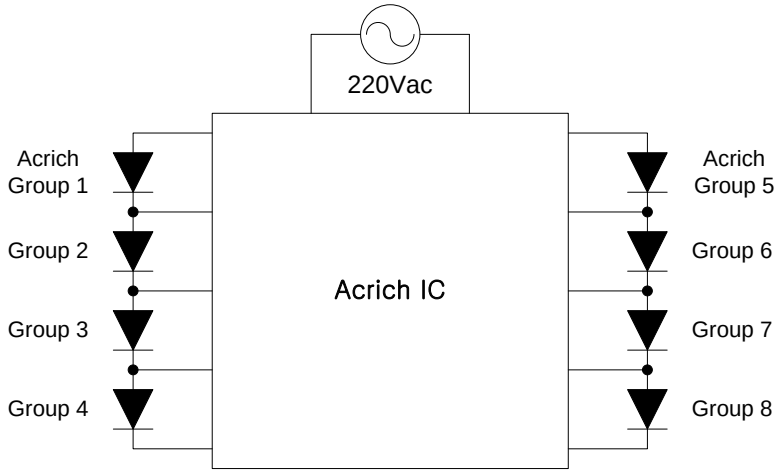

AC Input Current Wave
(= Acrich's Driving Current)

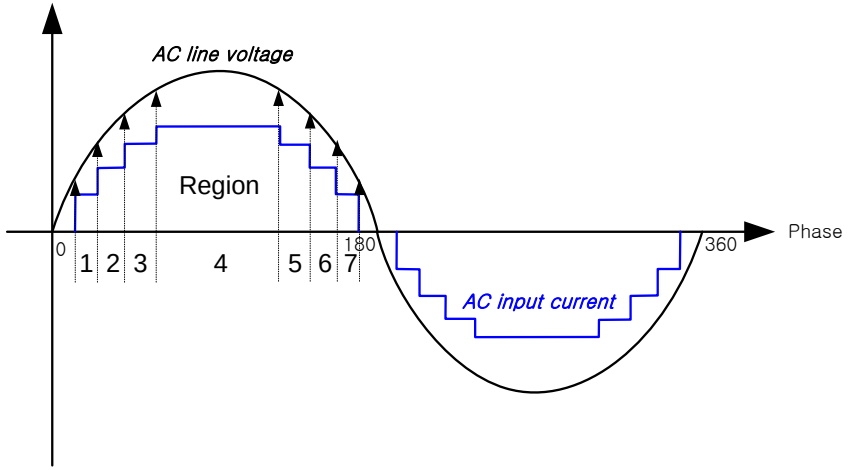

Description of the Acrich's Operation

- ◆ Operation of the Acrich group 1~4 same as a group 5~8
- ◆ Operation table of each Acrich group (phase 0 ~ 180°)

Region	1	2	3	4	5	6	7
Group 1	ON	ON	ON	ON	ON	ON	ON
Group 2	OFF	ON	ON	ON	ON	ON	OFF
Group 3	OFF	OFF	ON	ON	ON	OFF	OFF
Group 4	OFF	OFF	OFF	ON	OFF	OFF	OFF

Acrich2+ Module Configuration

■ Acrich2+ 120Vrms/08W

Condition	Input Voltage : 120Vrms	
	8W (LED Q'ty)	
Array Circuit	Series	Parallel
Stage1	2	4
Stage2	2	4
Stage3	1	3
Stage4	1	2
No. of LED	21ea	

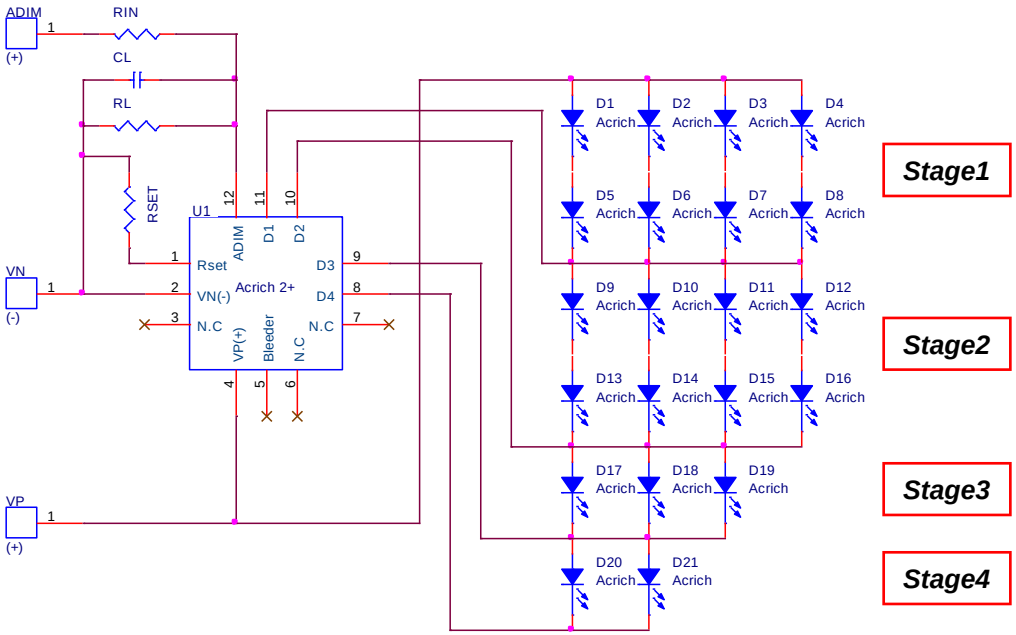

Note.
✓U1 : Acrich2.5+ IC, (DT3001X)
✓LED1 ~ LED21 : Acrich MJT 5630 PKG (SAW8KG0B)

Acrich2+ Module Configuration

■ Acrich2+ 120Vrms/12W

Condition	Input Voltage : 120Vrms	
	12W (LED Q'ty)	
Array Circuit	Series	Parallel
Stage1	2	5
Stage2	2	5
Stage3	1	5
Stage4	1	5
No. of LED	30ea	

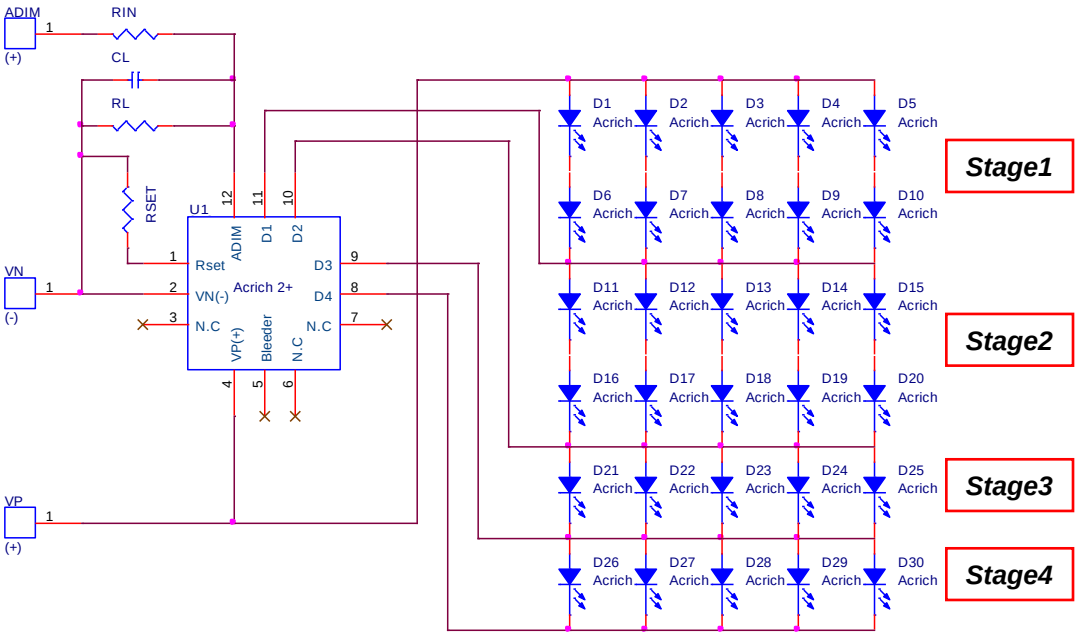

Note.
✓U1 : Acrich2.5+ IC, (DT3001X)
✓LED1 ~ LED30 : Acrich MJT 5630 PKG (SAW8KG0B)

Acrich2+ Module Configuration

■ Acrich2+ 120Vrms/16W

Condition	Input Voltage : 120Vrms	
	16W (LED Q'ty)	
Array Circuit	Series	Parallel
Stage1	2	7
Stage2	2	7
Stage3	1	7
Stage4	1	7
No. of LED	42ea	

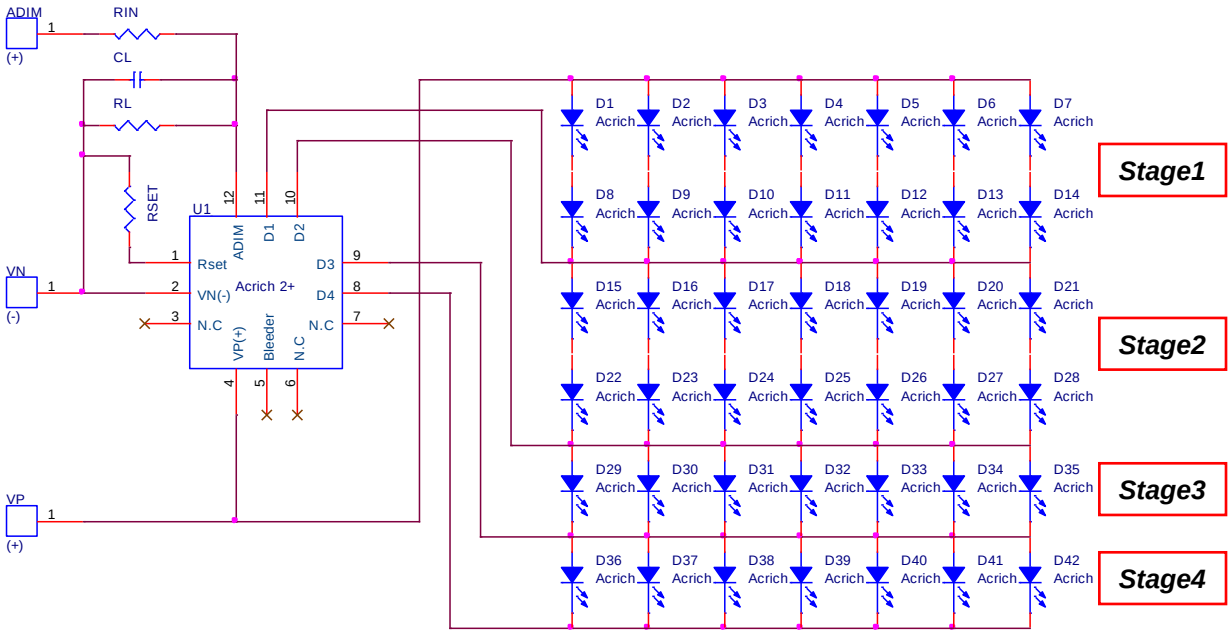

Note.
✓U1 : Acrich2.5+ IC, (DT3001X)
✓LED1 ~ LED42 : Acrich MJT 5630 PKG (SAW8KG0B)

Acrich2+ Module Configuration

■ Acrich2+ 220Vrms/08W

Condition	Input Voltage : 220Vrms	
	8W (LED Q'ty)	
Array Circuit	Series	Parallel
Stage1	3	2
Stage2	3	2
Stage3	3	2
Stage4	3	1
No. of LED	21ea	

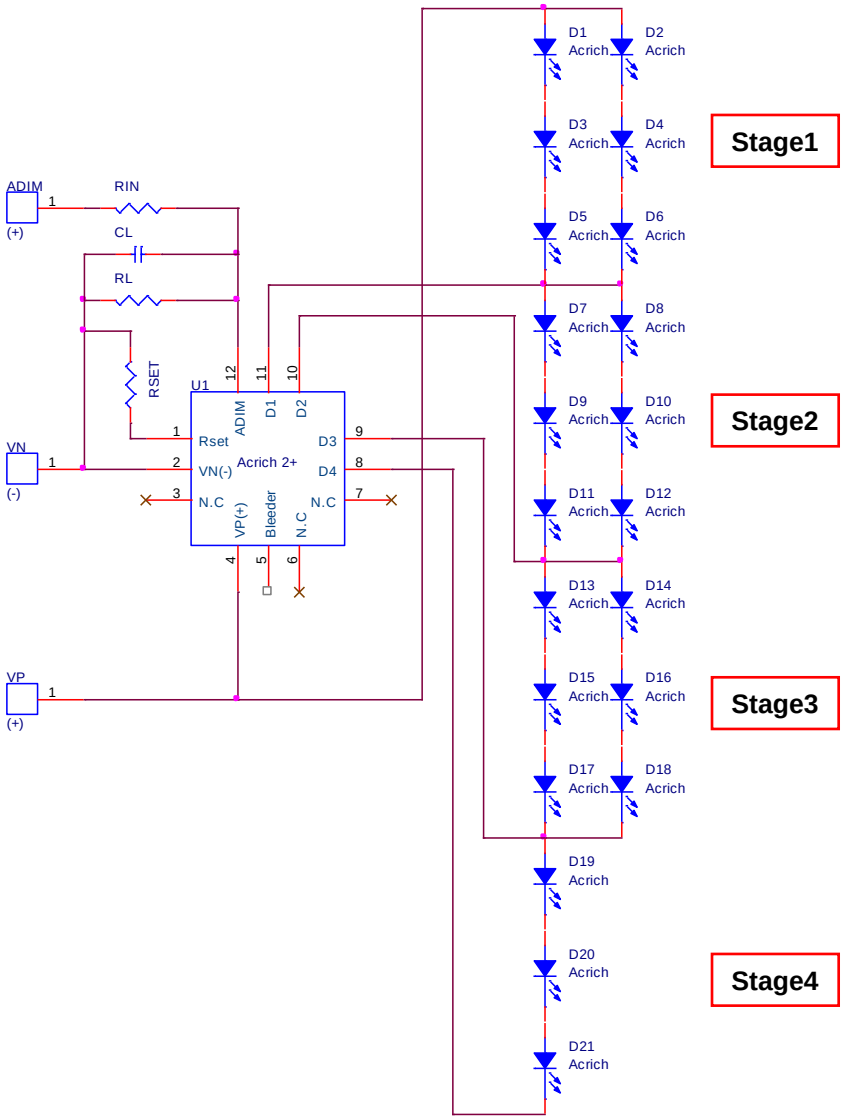

Note.
✓U1 : Acrich2.5+ IC, (DT3001X)
✓LED1 ~ LED21 : Acrich MJT 5630 PKG (SAW8KG0B)

Acrich2+ Module Configuration

■ Acrich2+ 220Vrms/12W

Condition	Input Voltage : 220Vrms	
	8W (LED Q'ty)	
Array Circuit	Series	Parallel
Stage1	3	3
Stage2	3	3
Stage3	3	2
Stage4	3	2
No. of LED	30ea	

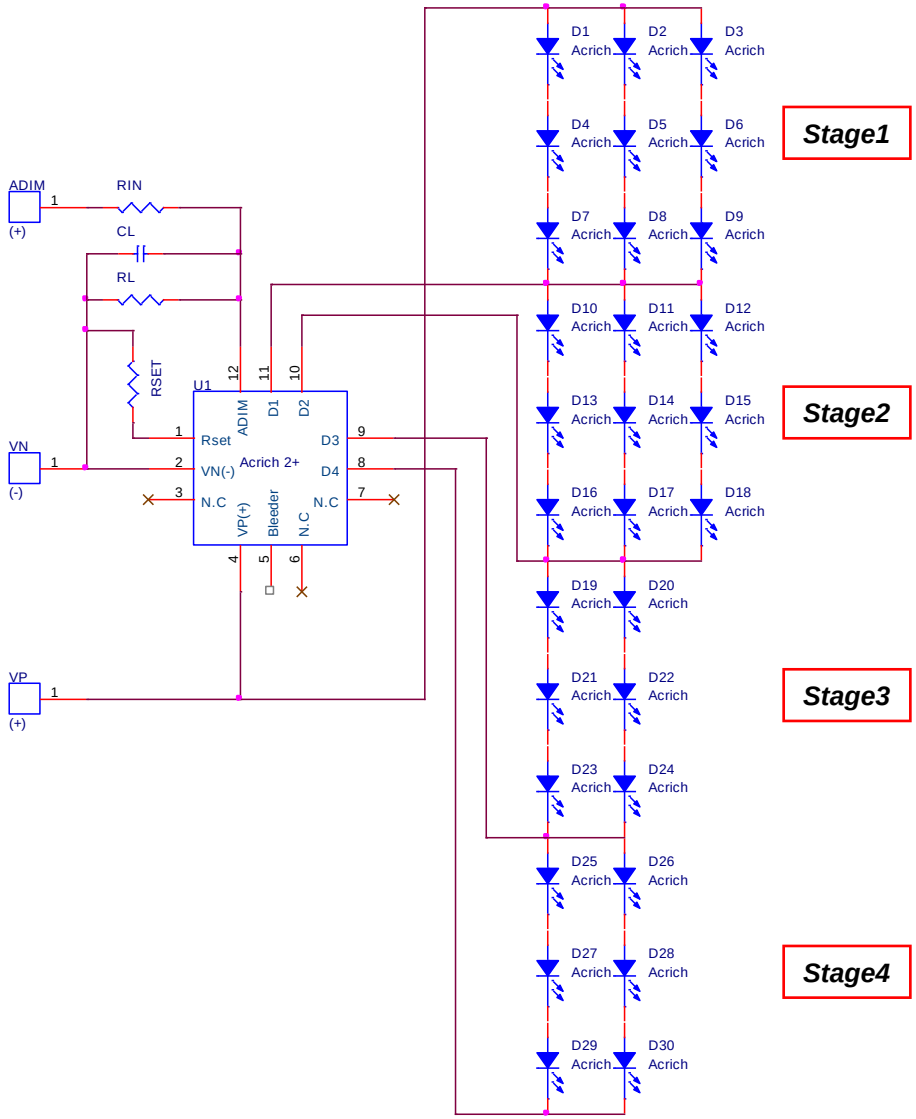

Note.
✓U1 : Acrich2.5+ IC, (DT3001X)
✓LED1 ~ LED30 : Acrich MJT 5630 PKG (SAW8KG0B)

Acrich2+ Module Configuration

■ Acrich2+ 220Vrms/16W

Condition	Input Voltage : 220Vrms	
	8W (LED Q'ty)	
Array Circuit	Series	Parallel
Stage1	3	4
Stage2	3	4
Stage3	3	3
Stage4	3	3
No. of LED	42ea	

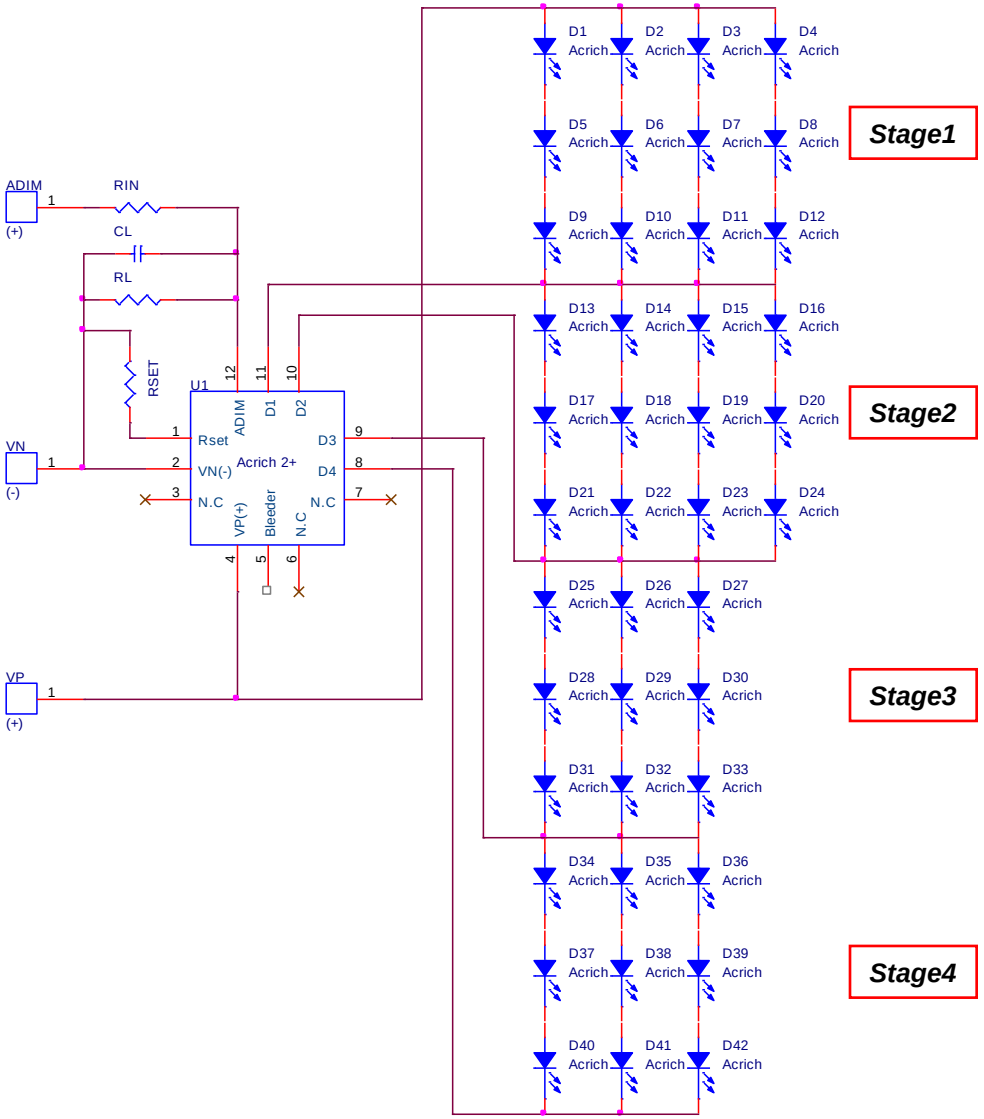

Note.
✓U1 : Acrich2.5+ IC, (DT3001X)
✓LED1 ~ LED42 : Acrich MJT 5630 PKG (SAW8KG0B)

Acrich2, Surge Protection Circuit

■ **Feature**

- -. Operating Voltage : 120V ~ 230Vac/Single Phase 2Wire
- -. Rated Power : 4 ~ 12W
- -. Max. Surge Voltage (1.2/50us) : 1.2kV

Schematic	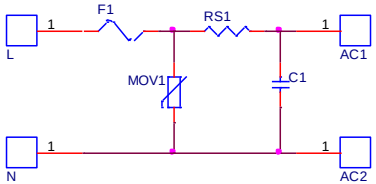	
PCB Layout	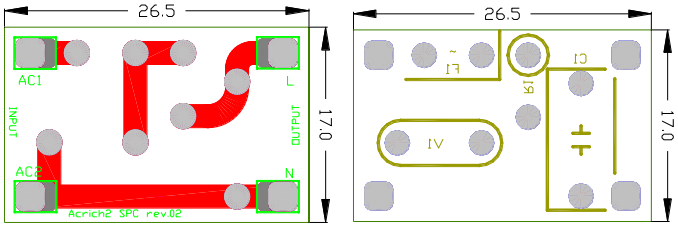	**1. PCB Spec.** - FR4, 1Layer, 1Oz - 26.5(L)x17(W)x1.6(t) [Unit : mm]

※ **Part list of material : Please contact your nearest distributor or one of our Seoul semiconductor sales offices.**

Acrich2, Surge Protection Circuit

■ **Feature**

-. Operating Voltage : 120V ~ 230Vac/Single Phase 2Wire

-. Rated Power : 4 ~ 16W

-. Max. Surge Voltage (1.2/50us) : 1.2kV

Schematic	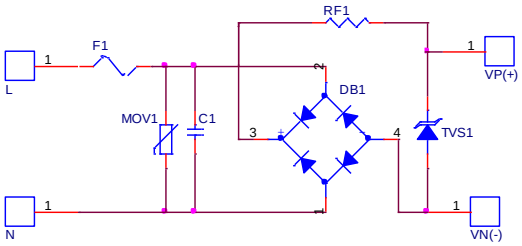	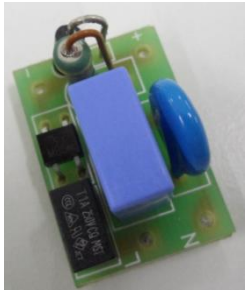
PCB Layout	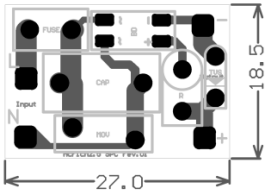 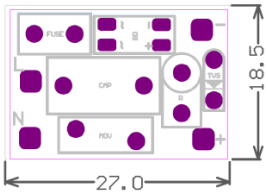	**1. PCB Spec.** **- FR4, 1Layer, 1Oz** **- 27(L)x18.5(W)x1.6(t) [Unit : mm]**

※ Part list of material : Please contact your nearest distributor or one of our Seoul semiconductor sales offices.

Performance

■ Test Conditions & Test Results

✓Acrich2 SPC (Surge Protection Circuit) is generally uses electrical fuse, MOV (Metal Oxide Varistor) and TVS.

✓The circuit configuration and component values should be selected suitably according to target protection specification.

Combination Wave IEC 6100-4-5		
Line to Line	Rise time	Duration
Open circuit Voltage	1.2us	50us
Short Circuit Current	8us	20us
Surge Voltage	±0.5kV x 5Pulses (@ Phase Angle)	
Phase Angle	0˚, 90˚, 180˚, 270˚	

Table1. Test Conditions

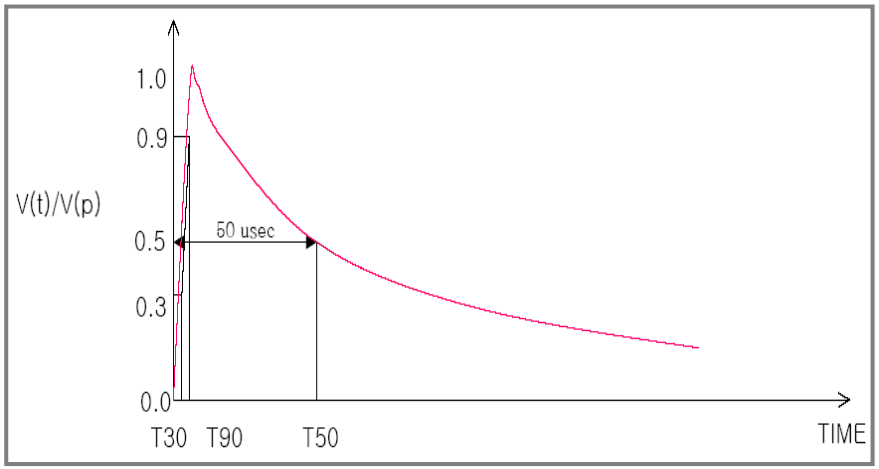

Figure 1. Combination wave, Open Surge Voltage (IEC 61000-4-5)

Specification of Acrich2+ (DT3001X)

■ Features & Typical Application Circuit

■ Features

- ✓ **High Power Factor > 0.95**
- ✓ **Rated Power : 4W/8W/12W/16W**
- ✓ **Low Total Harmonic Distortion <20%**
- ✓ **Over Temperature Protection**
- ✓ **Adjustable LED Driving Current with External Resistors**
- ✓ **Analog Dimming Function (ADIM)**
- ✓ **Thermally Enhanced 12 QFN (6 x 6 mm)**

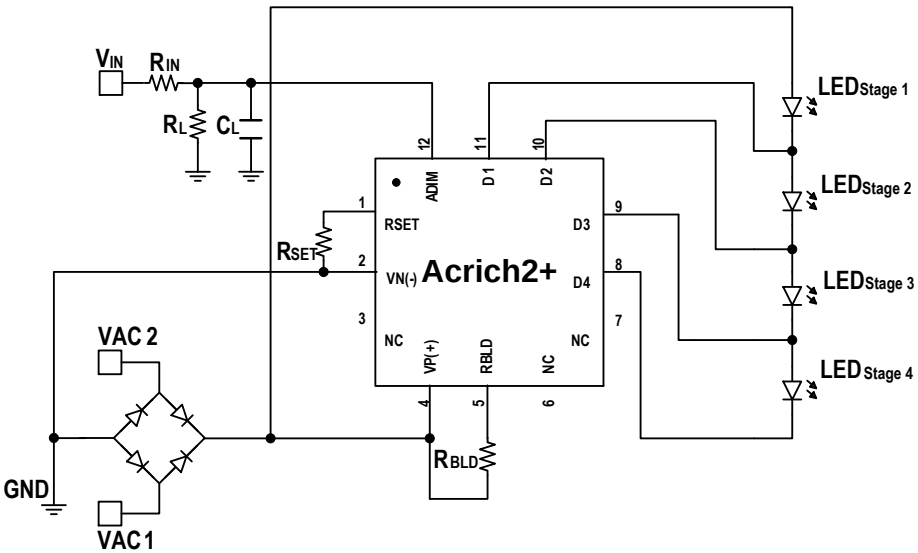

Figure. 1 Typical Application Circuit

Table. 1 Package Thermal Characteristics

Parameter	*Symbol*	*Value*	*Unit*
Junction to ambient thermal resistance	Θ_{JA}	34.65	°C/W
Junction to case thermal resistance	Θ_{JC}	11.25	°C/W
Junction to Board	Θ_{JB}	25.67	°C/W

*Test conditions
- θ_{JA} : The package thermal impedance is calculated in accordance with JESD 51-7
- θ_{JC} : The package thermal impedance is calculated in accordance with JESD 51-14
- θ_{JB} : The package thermal impedance is calculated in accordance with JESD 51-8

Specification of Acrich2+ (DT3001X)

■ Pinning Information

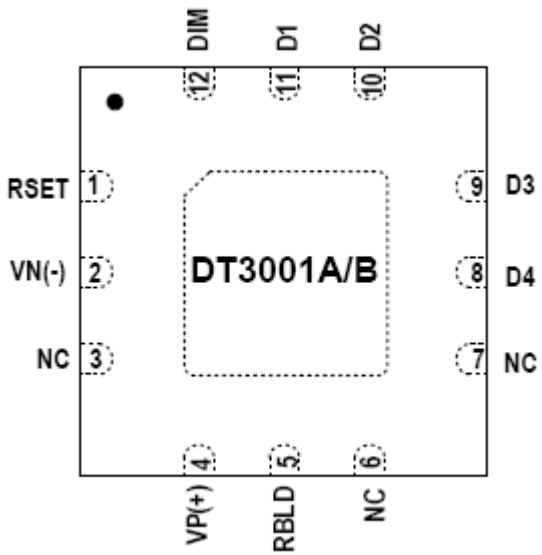

Figure. 2 Package – Top View

Table 2. Pin Descriptions

Pin	Symbol	Descriptions
1	Rset	Resistor Connection for Driver Current Setting
2	VN(-)	Voltage input (-)
3	N.C	No Connection
4	VP(+)	Voltage input (+)
5	RBLD	Bleeder Resistor Connection
6	N.C	No Connection
7	N.C	No Connection
8	D4	Driver output-4
9	D3	Driver output-3
10	D2	Driver output-2
11	D1	Driver output-1
12	DIM	ADIM, Analog Dimming Pin (Posistive)

Note : Exposed pad on bottom surface is thermal pad. Therefore,
It must be not connected to any electrical node. (Electrically Isolated)

Specification of Acrich2+ (DT3001X)

■ Block Diagram & Absolute Maximum Ratings

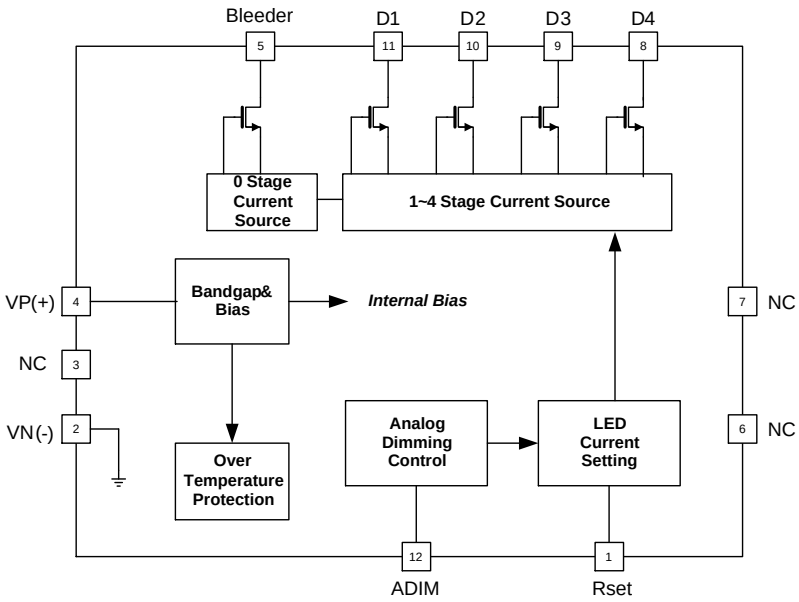

Figure. 3 Block Diagram

Table. 3 Absolute Maximum Ratings

Parameter	*Symbol*	*Value*	*Unit*
VP(+) to VN(-), D1~D4, Bleeder to VN(-)	V_{HV}	-0.3 ~ +450	V
Dim to VN(-), Rset to VN(-)	V_{LV}	-0.3 ~ +6.5	V
Operating Ambient Temperature	T_A	-30~+100	°C
Storage Temperature	T_{STG}	-40 ~ +120	°C
Board Temperature	T_B	125	°C
Maximum Junction Temperature	T_J	-55~+150	°C
ESD (HBM)	V_{HBMV}	1.5	kV

Specification of Acrich2+ (DT3001X)

■ Electrical Characteristics

Table 1. Driving Current (4 channels / stages)

Driver Stage Current @120V/8W (Typ.)			
Driver Output	Operating Conditions	(1)Peak Current [mA]	(2)Max. Peak Current @ Transient [mA]
I_{D1}	1st Stage @120V,8W	38.5	300
I_{D2}	2nd Stage @120V,8W	64.2	430
I_{D3}	3rd Stage @120V,8W	82.5	550
I_{D4}	4th Stage @120V,8W	91.7	650

Driver Stage Current @220V/8W (Typ.)			
Driver Output	Operating Conditions	(1)Peak Current [mA]	(2)Max. Peak Current @ Transient [mA]
I_{D1}	1st Stage @220V,8W	21.0	300
I_{D2}	2nd Stage @220V,8W	35.0	430
I_{D3}	3rd Stage @220V,8W	45.0	550
I_{D4}	4th Stage @220V,8W	50.0	650

Driver Stage Current @120V/12W (Typ.)			
Driver Output	Operating Conditions	(1)Peak Current [mA]	(2)Max. Peak Current @ Transient [mA]
I_{D1}	1st Stage @120V,12W	57.8	300
I_{D2}	2nd Stage @120V,12W	96.3	430
I_{D3}	3rd Stage @120V,12W	123.8	550
I_{D4}	4th Stage @120V,12W	137.6	650

Driver Stage Current @220V/12W (Typ.)			
Driver Output	Operating Conditions	(1)Peak Current [mA]	(2)Max. Peak Current @ Transient [mA]
I_{D1}	1st Stage @220V,12W	31.5	300
I_{D2}	2nd Stage @220V,12W	52.5	430
I_{D3}	3rd Stage @220V,12W	67.5	550
I_{D4}	4th Stage @220V,12W	75.0	650

Driver Stage Current @120V/16W (Typ.)			
Driver Output	Operating Conditions	(1)Peak Current [mA]	(2)Max. Peak Current @ Transient [mA]
I_{D1}	1st Stage @120V,16W	77.0	300
I_{D2}	2nd Stage @120V,16W	128.4	430
I_{D3}	3rd Stage @120V,16W	165.0	550
I_{D4}	4th Stage @120V,16W	183.4	650

Driver Stage Current @220V/16W (Typ.)			
Driver Output	Operating Conditions	(1)Peak Current [mA]	(2)Max. Peak Current @ Transient [mA]
I_{D1}	1st Stage @220V,16W	42.0	300
I_{D2}	2nd Stage @220V,16W	70.0	430
I_{D3}	3rd Stage @220V,16W	90.0	550
I_{D4}	4th Stage @220V,16W	100.0	650

Note :
(1) Driver stage current is based on the circuit of Seoul Semiconductor's LED array.
(2) The Maximum peak current value for the transient mode(@ within100us). Therefore, Under normal operating mode is not guaranteed.

Specification of Acrich2+ (DT3001X)

■ Recommended R_{SET} Values

Table. 5 Recommended Rset Values, DT3001A

IC Version	Voltage[V]	Current [mA]	Power [W]	Rset [KΩ]	Voltage [V]	Current [mA]	Power [W]	Rset[KΩ]
A-version (DT3001A)	220	73.10	16	1.64	120	134.11	16	3.86
		68.62	15	1.52		125.91	15	3.50
		64.05	14	1.40		117.52	14	3.15
		59.51	13	1.29		109.16	13	2.83
		55.00	12	1.18		100.71	12	2.53
		50.35	11	1.07		92.27	11	2.25
		45.79	10	0.97		83.96	10	2.00
		41.22	9	0.87		75.52	9	1.75
		36.58	8	0.77		67.05	8	1.52
		32.00	7	0.67		58.85	7	1.31
		27.46	6	0.53		50.40	6	1.10
		22.97	5	0.48		42.05	5	0.91
		18.35	4	0.39		33.49	4	0.72

Table. 6 Recommended Rset Values, DT3001B

IC version	Voltage[V]	Current [mA]	Power [W]	Rset [KΩ]	Voltage [V]	Current [mA]	Power [W]	Rset[KΩ]
B-Version (DT3001B)	220	73.24	16	1.65	120	134.27	16	3.96
		68.66	15	1.45		125.88	15	3.58
		64.08	14	1.35		117.49	14	3.20
		59.51	13	1.29		109.10	13	2.87
		54.93	12	1.14		100.70	12	2.56
		50.35	11	1.07		92.31	11	2.27
		45.77	10	0.94		83.92	10	2.00
		41.20	9	0.83		75.53	9	1.75
		36.62	8	0.74		67.14	8	1.52
		32.04	7	0.65		58.74	7	1.29
		27.46	6	0.57		50.35	6	1.09
		22.89	5	0.48		41.96	5	0.90
		18.31	4	0.39		33.57	4	0.72

Specification of Acrich2+ (DT3001X)

■ Package Outline & Dimensions

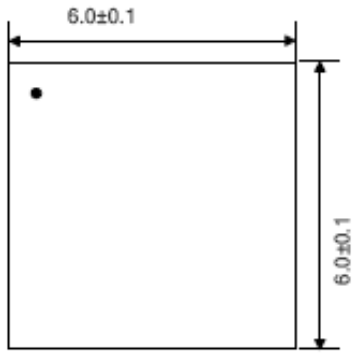

Top View

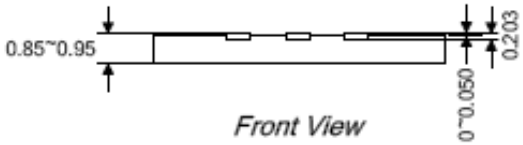

Front View

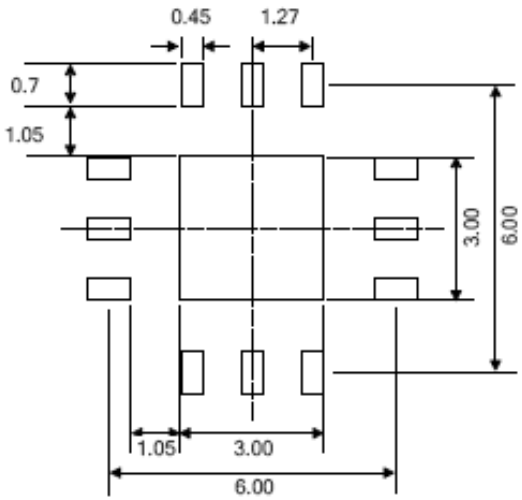

Recommend solder PAD

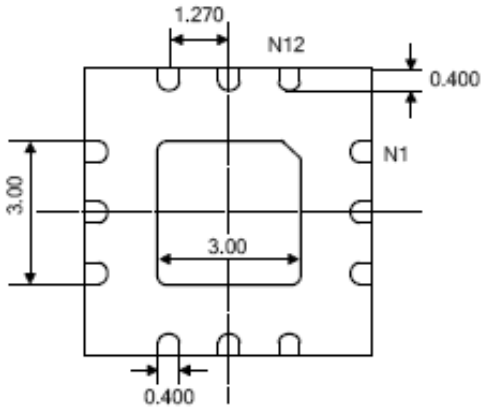

Bottom View

Note

1. Dimensions are in millimeters
2. Dimensions are exclusive of mold flash and interlead flash

Design of Acrich2+ Module

■ Selection of LED Current (Module Power Consumption)

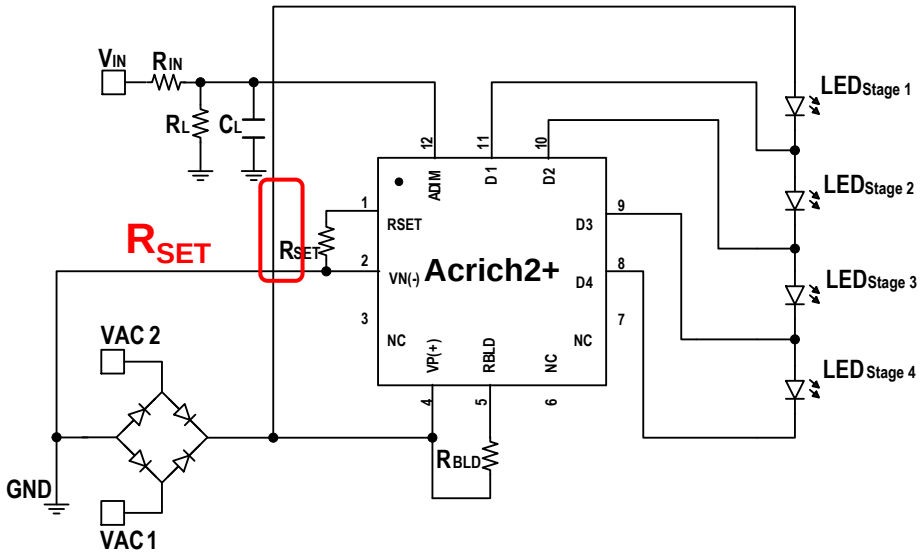

Figure. 1 Typical Application Circuit

Table. 1 Recommended IC-Type

Input Voltage [Vrms]	IC-Type	Acrich2+ Module Power [W]	R_{SET} [kΩ] ±1%
120	A	4	0.75
	A	8	1.54
	B	12	2.49
	B	16	3.74
220	A	4	0.42
	A	8	0.78
	A	12	1.18
	B	16	1.65

* LED Current setting is based of the circuit of Seoul Semiconductor's LED Array (Acrich MJT 5630 PKG)

1. LED output current setting

-. Acrich2+ module's current can be controlled by Rset value. (Plz refer Table 1 and "Recommended Rset value" for reference)

※ Seoul semiconductor highly recommends to designers to decided Rset value based on actual sample

-. Rset value needs to be carefully chosen with each component's permitable error range to meet targeted module power

Design of Acrich2+ Module

■ Design of ADIM (voltage divider circuit)

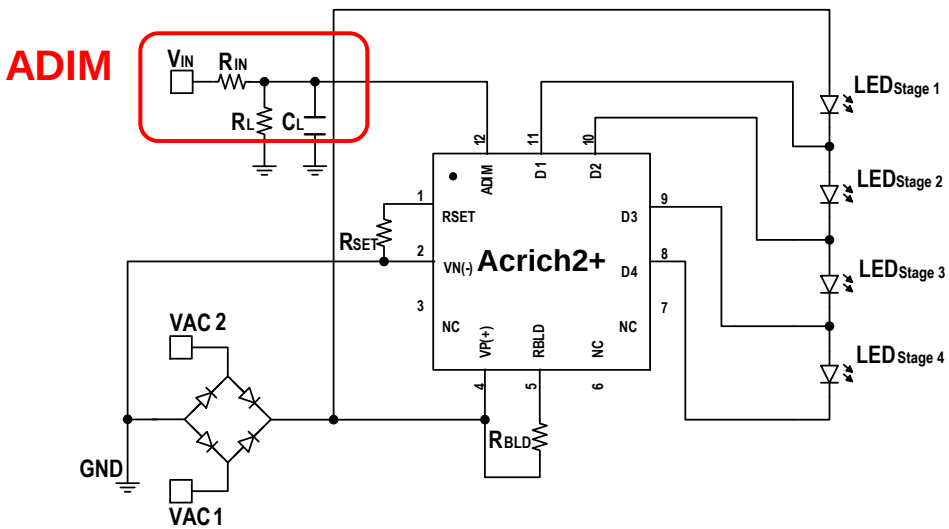

Figure. 2 Typical Application Circuit

■ Acrich2 IC(DT3001) Support ADIM(Analog Dimming)

✓ Applying a voltage source on ADMI

✓ Adjust the light output by external dimming signal

✓ Acrich2 module circuit is non isolated

✓ The Dimming circuit need to be connected with same ground or isolation circuit

1. LED output current setting

2. Analog Dimming Setting (ADIM)

- R_{IN} needs to be set 12kΩ and R_L to be decided by Dimming voltage with following formula.

$$R_L = \frac{R_{IN} \times V_{ADIM}}{V_{IN} - V_{ADIM}}$$

Note.

[1] 1.5V input to #12 pin : LED Flux output100%

[2] R_{IN} , R_L is voltage parting circuit. Fix R_{IN} value as 12kΩ to minimize IC power

[3] C_L as ADIM's smoothing circuit. Recommends 100nF (0.1~1uF)

■ Calculation example

Case 1 : V_{IN} = 0 ~ 4V

$$R_L = \frac{12k\Omega \times 1.5V}{4V - 1.5V} = 7.2k\Omega$$

Case 2 : V_{IN} = 0 ~ 10V

$$R_L = \frac{12k\Omega \times 1.5V}{10V - 1.5V} = 2.1k\Omega$$

Where

- V_{IN} : External dimming voltage signals
- V_{ADIM} : 1.5V (Constant value[1])
- R_L : 12kΩ (Fixed value[2])
- C_L : 100nF [3]

Acrich2+ Analog Dimming Solution

■ Design Example

-. In case of DC linear voltage

Where

- V_{IN} : External dimming voltage signals
- V_{ADIM} : 1.5V (Constant value[1])
- R_L : 12kΩ (Fixed value[2])
- C_L : 0.1uF [3]

$$R_L = \frac{R_{IN} \times V_{ADIM}}{V_{IN} - V_{ADIM}}$$

Note.

[1] When the V_{ADIM} is 1.5V[pin,12] the LED Flux reaches the 100%.

[2] RIN and RL is Voltage divider circuit. Then total resistance is limited in order to minimize IC power consumption.

[3] C_L is voltage compensation capacitor. (1~10uF)

Case 1

V_{IN}	3.0	V
V_{ADIM}	1.5	V
R_{IN}	12.0	KΩ
R_L	12.0	KΩ

Case 2

V_{IN}	4.0	V
V_{ADIM}	1.5	V
R_{IN}	12.0	KΩ
R_L	7.2	KΩ

Case 3

V_{IN}	10.0	V
V_{ADIM}	1.5	V
R_{IN}	12.0	KΩ
R_L	2.1	KΩ

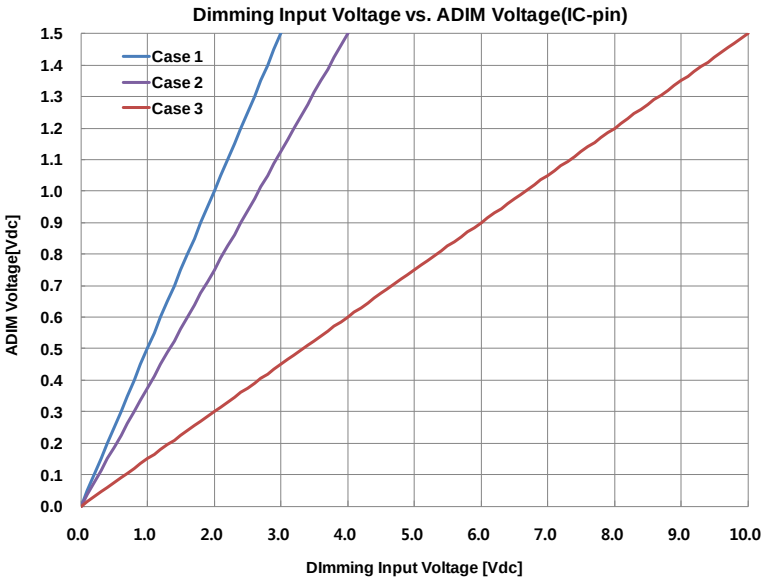

Acrich2+ Analog Dimming Solution

■ Design Example

-. In case of PWM voltage (fixed frequency)

Input Voltage	10.0	Vpeak	PWM, Aplitude
Input Frequency	20.0	kHz	Fixed Freq.
RIN	12.0	kΩ	
RL	2.1	kΩ	
CL	100	nF	
Fc	0.133	kHz	Cut-off Freq.
Time Constant	1200.0	us	

Duty [%]	Vout [Vdc]	Ton [us]	Toff [us]
3	0.3	1.5	48.5
5	0.5	2.5	47.5
10	1.0	5.0	45.0
20	2.0	10.0	40.0
30	3.0	15.0	35.0
40	4.0	20.0	30.0
50	5.0	25.0	25.0
60	6.0	30.0	20.0
70	7.0	35.0	15.0
80	8.0	40.0	10.0
90	9.0	45.0	5.0
100	10.0	50.0	0.0

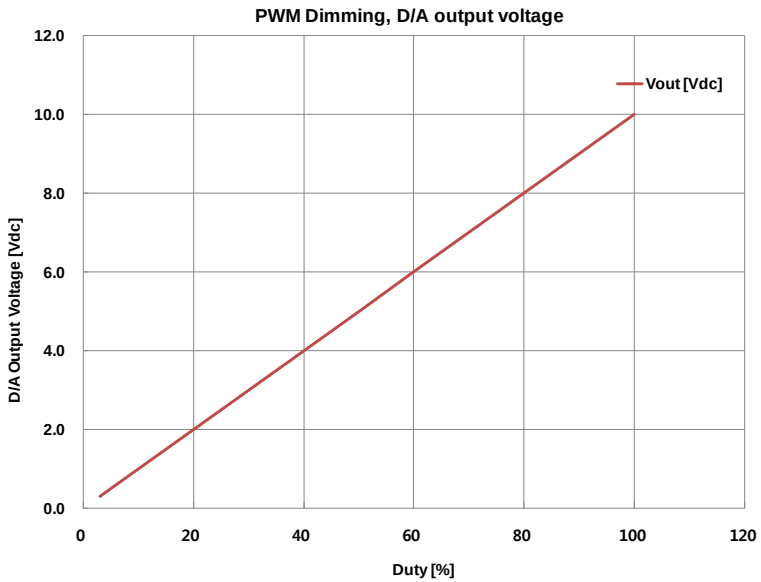

✓**V_{OUT} value can be calculated as following formula.**

$$Duty = \frac{T_{ON}}{T_{ON} + T_{OFF}}$$

$$V_{OUT} = V_{IN} \times D$$

Where

- V_{IN} : 10V, Input Voltage (PWM)
- V_{OUT} : D/A Output voltage
- T_{ON} : PWM, Pulse On-time
- T_{OFF} : PWM, Pulse Off-time

Acrich2+ Analog Dimming Solution

■ Dimming Performance

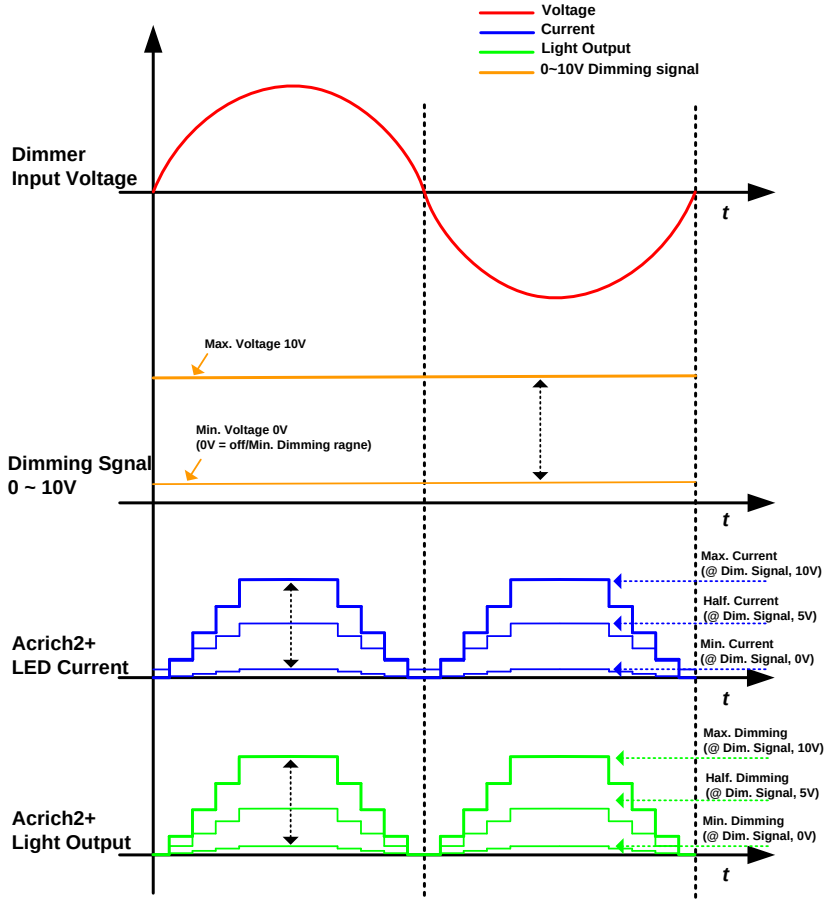

Figure 1. Analog Dimming Timing chart

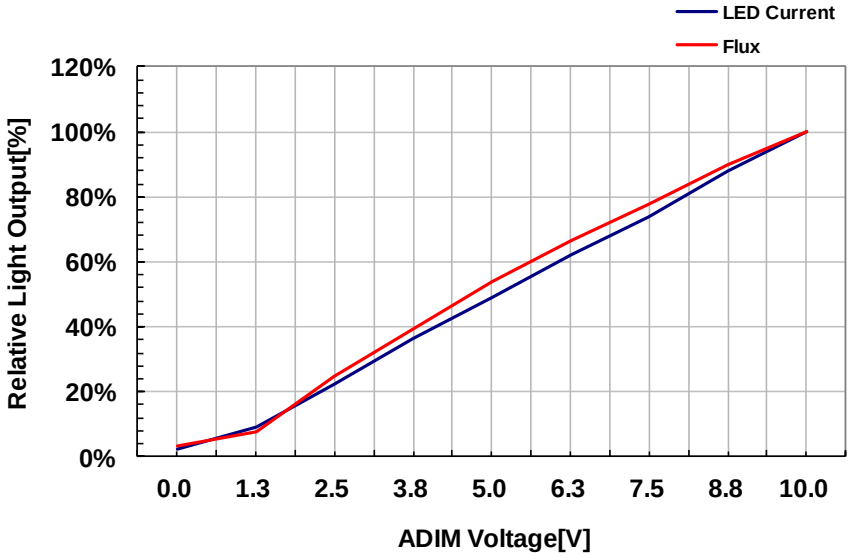

Figure 2. Analog Dimming Curve
(Measurements performed at 16W Module)

Table 1. Specification of ADIM

Input Signal	DC Voltage [V]	PWM (Pulse Width Module)	Relative Light Output [%]
Minimum	0	Max. Amplitude : 10V	2~5 (Typ. 5%)
Maximum	10	Duty Ratio : 0~100% (@50kHz)	100

THANK YOU!

www.seoulsemicon.com

For more information, please contact below :

T(+82)-70 4391 8046, M(+82)-10 3340 0724
☞ ricky.im@seoulsemicon.com

- Appendix -

Safety standard – UL, TUV/CE

NOTICE OF AUTHORIZATION TO APPLY THE UL MARK

09/20/2012

Seoul Semiconductor
Ms. Mira Yun
1b-25, 727-5 Wonsi-dong
Danwon-gu
Ansan-city Kyunggi-do 425-851, Kr

Our Reference: File E315508, Vol. 1 Project Number 12CA48920
Your Reference: YUN, MIRA MS.
Project Scope: LED MODULE - SMJE-2V12W1P3, SMJE-2V08W1P3 / 2 ALT MODELS

Dear Ms. Mira Yun:

UL's investigation of your product(s) has been completed under the above Reference Number and the product was determined to comply with the applicable requirements.

This letter temporarily supplements the UL Follow-Up Services Procedure and serves as authorization to apply the UL Mark only at authorized factories under UL's Follow-Up Service Program.

To provide the manufacturer with the intended authorization to use the UL Mark, the addressee must send a copy of this notice to each manufacturing location currently authorized in File E315508, Vol. 1.

This authorization is effective from the date of this Notice and only for products at the indicated manufacturing locations. Records in the Follow-Up Services Procedure covering the product are now being prepared and will be sent in the near future. Until then, this letter authorizes application of the UL Mark for 90 days from the date of this letter.

Products that bear the UL Mark shall be identical to those that were evaluated by UL and found to comply with UL's requirements. If changes in construction are discovered, appropriate action will be taken for products not in conformance with UL's requirements and continued use of the UL Mark may be withdrawn. UL may elect to withdraw use of the UL Mark if the Applicant or Manufacturer fails to comply with UL's requirements including ongoing compliance of the product, under UL's Follow-Up Service.

NOTICE OF COMPLETION
AND
AUTHORIZATION TO APPLY THE UL MARK

2013/01/31

Seoul Semiconductor
Ms. Mira Yun
1b-25, 727-5 Wonsi-dong
Danwon-gu
Ansan-city Kyunggi-do 425-851, Kr

Our Reference: File E315508, Vol. 1 Project Number 13CA02180
Your Reference: YUN, MIRA MS.
Project Scope: LED MODULE - SMJD-2V16W2P3 / 1 BASIC

Dear Ms. Mira Yun:

Congratulations! UL's investigation of your product(s) has been completed under the above Reference Number and the product was determined to comply with the applicable requirements. This letter temporarily supplements the UL Follow-Up Services Procedure and serves as authorization to apply the UL Mark at authorized factories under UL's Follow-Up Service Program. To provide your manufacturer(s) with the intended authorization to use the UL Mark, you must send a copy of this notice to each manufacturing location currently authorized under File E315508, Vol. 1.

Records in the Follow-Up Services Procedure covering the product are now being prepared and will be sent in the near future. Until then, this letter authorizes application of the UL Mark for 90 days from the date indicated above.

Additional requirements related to your responsibilities as the Applicant can be found in the document "Applicant responsibilities related to Early Authorizations" that can be found at the following web-site:
http://www.ul.com/EAResponsibilities

Any information and documentation provided to you involving UL Mark services are provided on behalf of UL LLC (UL) or any authorized licensee of UL.

We are excited you are now able to apply the UL Mark to your products and appreciate your business. Feel free to contact me or any of our Customer Service representatives if you have any questions.

Very truly yours,

JangSu Yun
+822 2009 9348
Engineer Project Associate
JangSu.Yun@ul.com

Reviewed by:

William R. Carney
847/664-1088
Chief Engineer Director I
William.R.Carney@ul.com

SEO8415-879B02

ZERTIFIKAT ◆ CERTIFICATE ◆ 認証書 ◆ СЕРТИФИКАТ ◆ CERTIFICADO ◆ CERTIFICAT

Product Service

Attestation of Conformity
No. N8 12 12 64846 013

Holder of Certificate: SEOUL SEMICONDUCTOR CO., LTD.
148-29, Gasan-dong, Geumcheon-gu
Seoul 153-801
REPUBLIC OF KOREA

Product: LED Module

Model(s): SMJD-3V16W1P3

Parameters:

Rated supply voltage:	200-240V~
Rated frequency:	50/60 Hz
Rated input power:	17.5 W
Protection class:	II
Degree of protection against ingress of liquids:	IPX0

Tested according to: EN 62031:2008

This Attestation of Conformity is issued on a voluntary basis according to the Low Voltage Directive 2006/95/EC relating to electrical equipment designed for use within certain voltage limits. It confirms that the listed equipment complies with the principal protection requirements of the directive. It refers only to the particular sample submitted for testing and certification. See also notes overleaf.

Test report no.: CPSA0144742

Date, 2012-12-20 (Ian Young-Yul Jawang)

After preparation of the necessary technical documentation as well as the EC conformity declaration the required CE marking can be affixed on the product. Other relevant directives have to be observed.

Page 1 of 1

TÜV SÜD Product Service GmbH · Zertifizierstelle · Ridlerstraße 65 · 80339 München · Germany

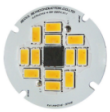

4W-UL

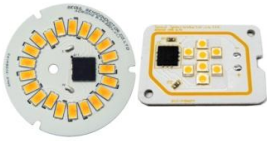

8W-UL

12W-UL

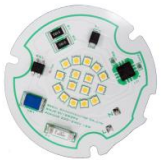

16W-UL

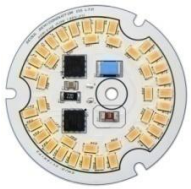

16W-UL, TUV/CE

17W-UL, TUV/CE