CASE FINISH	CURRENT (AMPS)	WORKING VOLTAGE				MAXIMUM DC RESISTANCE (OHMS)	MAXIMUM VOLTAGE DROP		MINIMUM CAPACITANCE (uF)	MIN. INSERTION LOSS PER MIL-STD-220, FULL LOAD, +25°C												
		-55°C TO +85°C		-55°C TO +125°C																		
		AC	DC	AC	DC		DC	AC		14 KHz	30 KHz	50 KHz	75 KHz	100 KHz	150 KHz	300 KHz	500 KHz	1 MHz	10 MHz	100 MHz	1 GHz	10 GHz
SOLDER	15	---	--	----	100	0.008	0.12	---	0.45	--	6	--	--	--	19	25	--	36	40	60	70	--

PART MARKING:

J M28861/01-006TB
OLSP2 DATE CODE

PACKAGE MARKING:

J M28861/01-006TB
OLSP2 DATE CODE
100VDC 54-367-051
QTY.

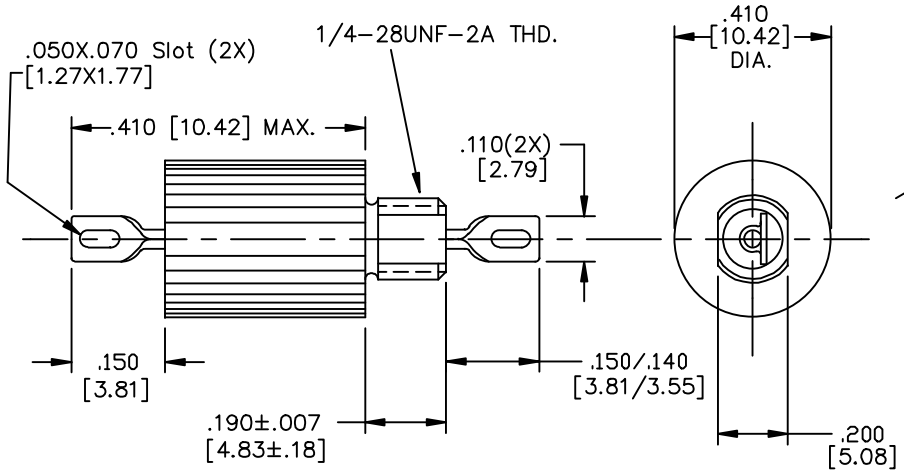

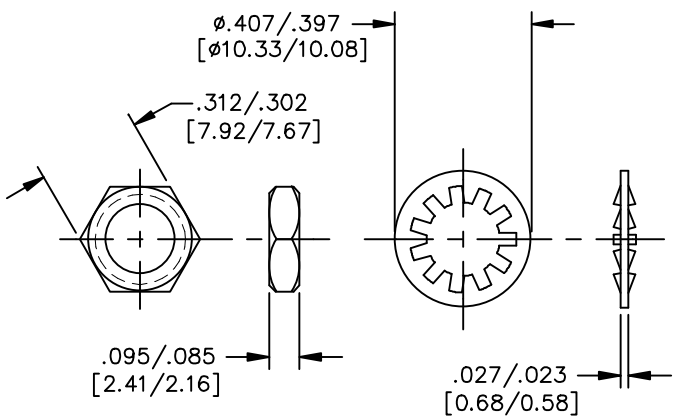

MTG. HARDWARE

MARKING NOTES:

N/A

SCHEMATIC

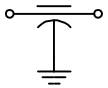

NOTES:

1. MOUNTING TORQUE NOT TO EXCEED 7in-lbs.
2. THIS PART CODED "NCA". API TECHNOLOGIES DOES NOT HAVE CHANGE AUTHORITY. CUSTOMER APPROVAL REQUIRED BEFORE PRODUCT/PROCESS CHANGES CAN BE MADE. (28)

REV. NO.	CHANGE NOTICE
28	CN 63412-ENG
27	CN 20281-CPD
26	CN 177817 REDRAWN

UNLESS OTHERWISE SPECIFIED DIMENSIONS ARE IN INCHES [MILLIMETERS]
DO NOT SCALE
THIRD ANGLE PROJECTION

TOLERANCES UNLESS OTHERWISE SPECIFIED
Fractions ±
Dec. .xx±
Dec. .xxx± .010
Angles ±0° 30'

CODE IDENT. NO. OLSP2

api technologies corp.
FAIRVIEW PENNSYLVANIA

Dwn. KEVERLINE
Ckd. 4-24-12
Engr K.Wood
Sheet 1 of 1

Description Low Pass EMI Filter

54-367-051

Quality Products From The Specialists In Electro-Magnetic Compatibility